NEEDLE VALVE
İĞNE VANA

No	Part	Material
1	Body	Stainless steel AISI 304
2	Stem	Stainless steel AISI 304
3	Glandpacking	Graphite
4	Gland	Stainless steel AISI 304
5	Gland nut	Stainless steel AISI 304
6	Handwheel	Pressed steel
7		
8		
9		
10		

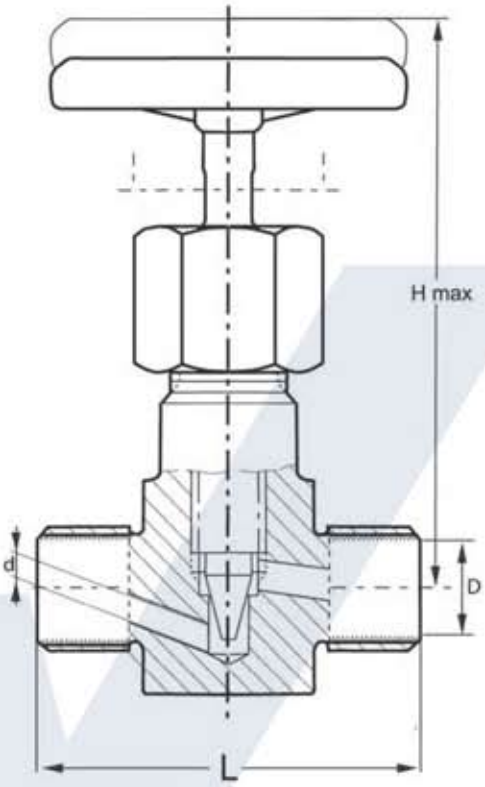

Variants:
Locked gland nut
NPT-threads

Other dimensions/materials on request

DN	D			d	L	Hmax	Max working-pressure		Weight Kg
							Mpa 20 °C	Mpa 300 °C	
6	1/8"			4	60	85	40,0	2,0	0,34
8	1/4"			5	60	85	40,0	2,0	0,38
10	3/8"			5	60	85	40,0	2,0	0,40
15	1/2"			5	60	85	40,0	2,0	0,42
20	3/4"			8	70	100	40,0	2,0	0,90
25	1"			10	78	110	40,0	2,0	1,05

Adres : İkitelli OSB Eskoop Sanayi Sitesi C8 Blok No:549 Başakşehir / İstanbul Türkiye
Tel: 212 297 57 30 Fax: 212 297 57 33 E-mail : dd@ddvalve.com Web: www.ddvalve.com