DIMENSIONS
401-100+CW1801

440/450 SERIES

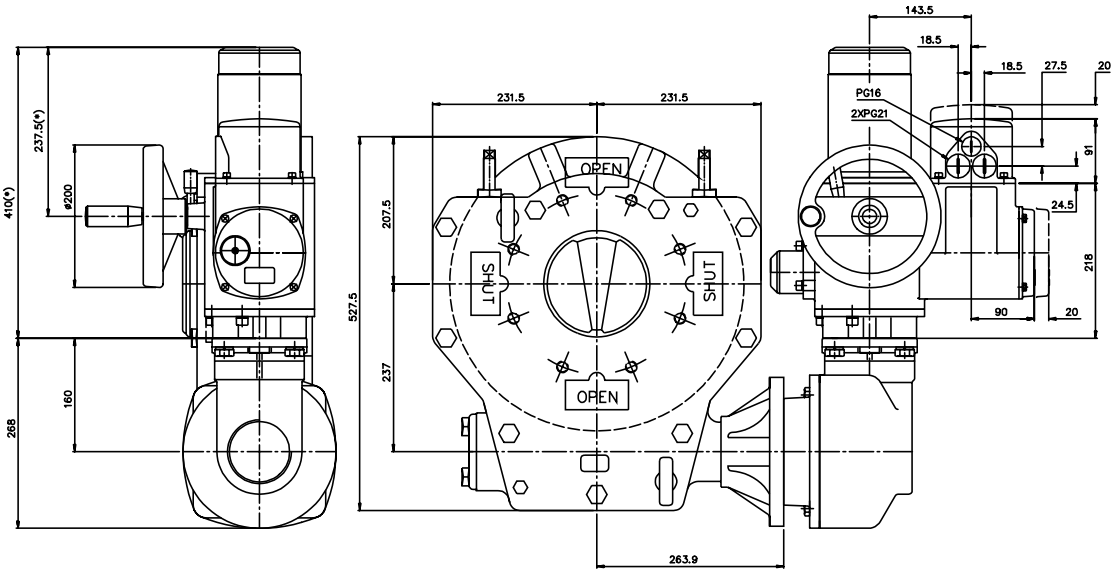

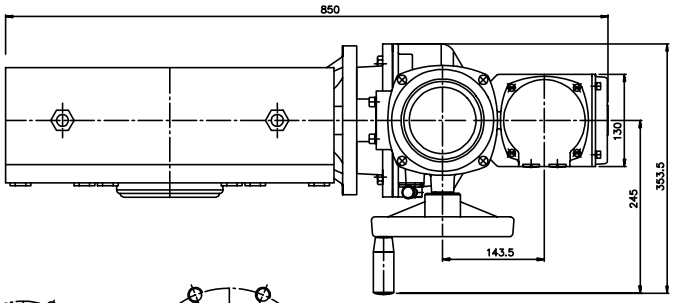

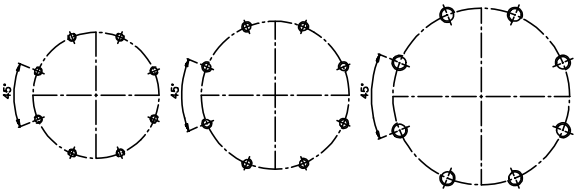

8xM16
Ø254
Output F25
S/ISO 5211

8xM20
Ø298
Output F30
S/ISO 5211

8xM30
Ø356
Output F35
S/ISO 5211

Dimensions in mm.
(*) Exact dimensions depending on motor required.

Approximate weight : 210 Kg.

Subject to change without notice. Previous data sheets invalid with the issue of the latest data sheets.

VALVE CONTROL

centork

Nº :

E1440X046

Issued:

09.99

CENTRALAIR, S.A. All rigths reserved.